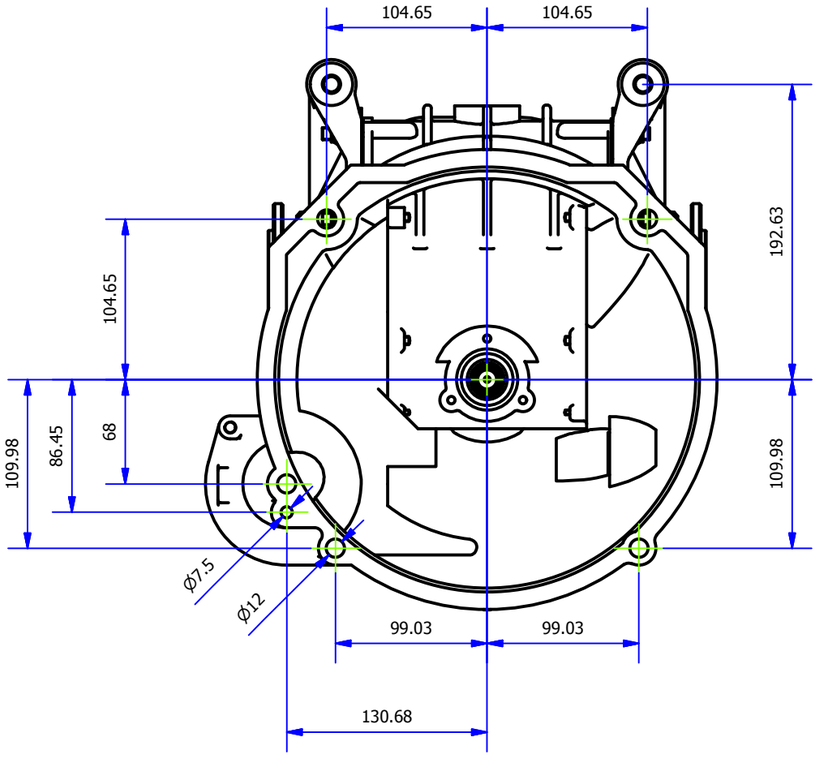

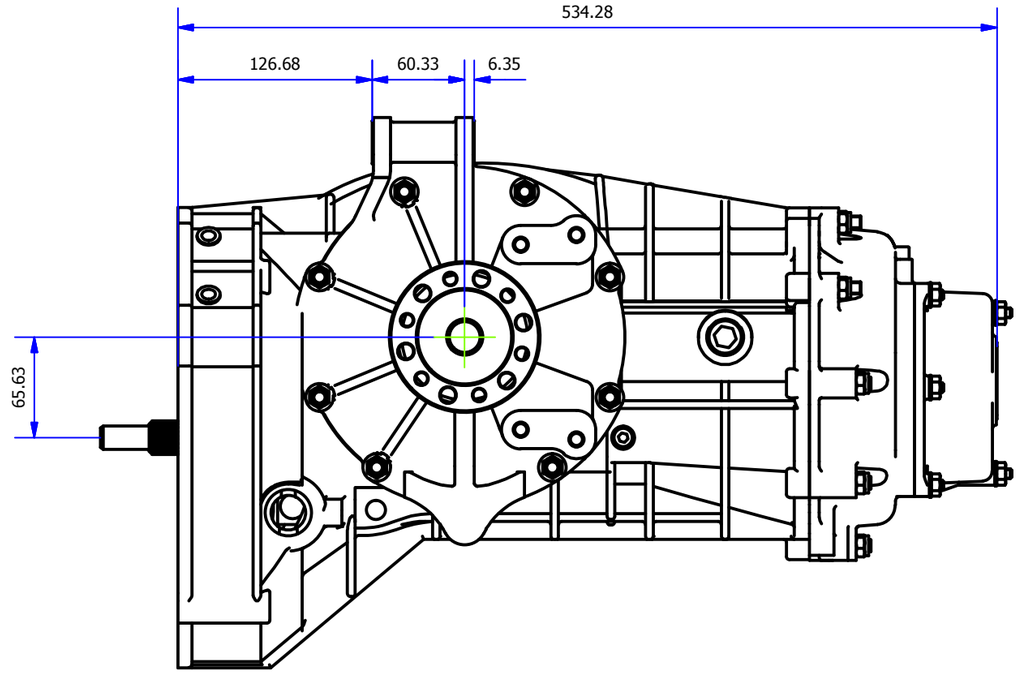

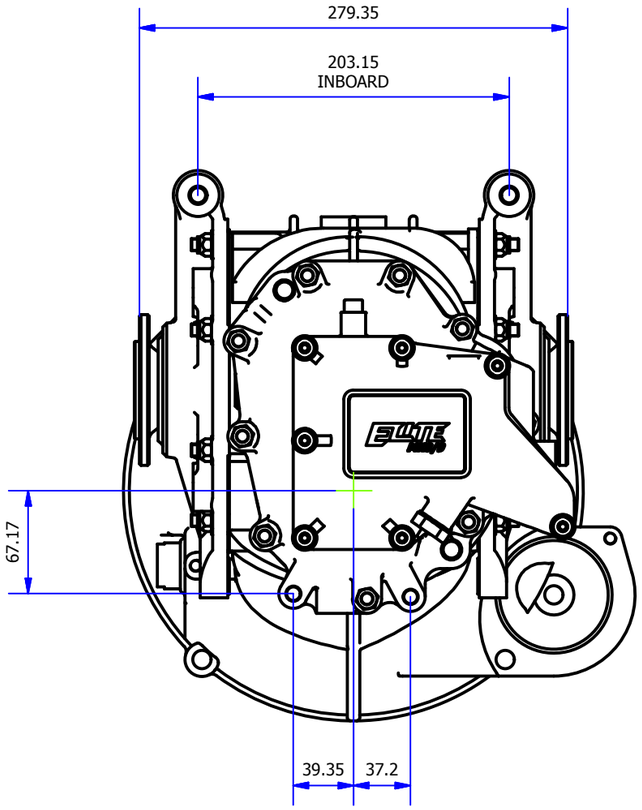

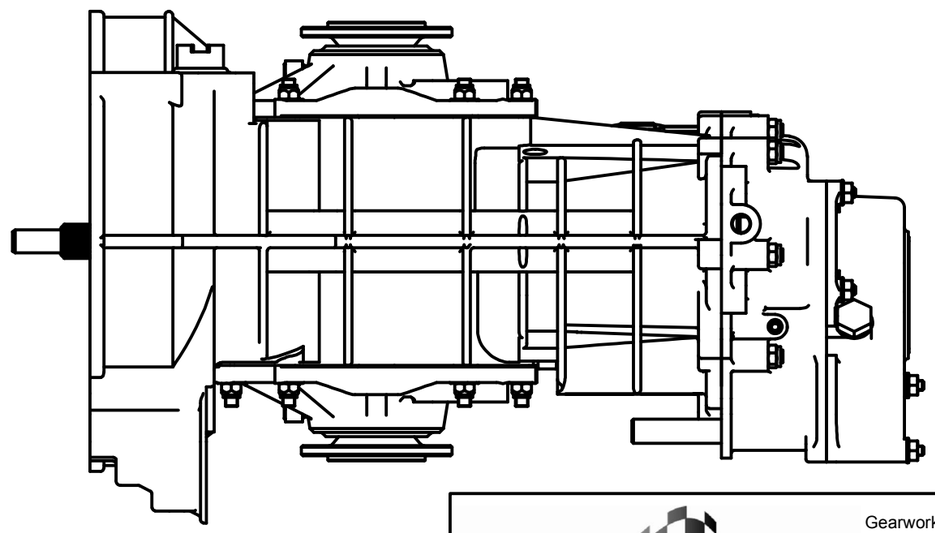

SHIFT PATTERN

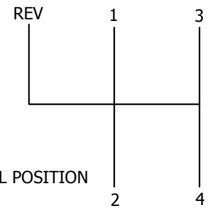

SELECTOR FINGER MOVEMENT
SELECTOR MOVES 5.58MM EITHER SIDE OF NEUTRAL POSITION
SELECTOR ROD ROTATES 32°

Gearworks,
Salem St.,
Etruria,
Stoke On Trent, ST1 5PR.
Tel 01782 280136,
Fax 01782 269913,
Email contact@eliteracingtransmissions.com

TITLE

MK8/9 4 SPEED GEARBOX FULL ASSEMBLY

DRG. No. ERT912323

Issue